Arcadia
ARREDI E PARETI PER UFFICIO

GRUPPO Penta

K I N E S I S

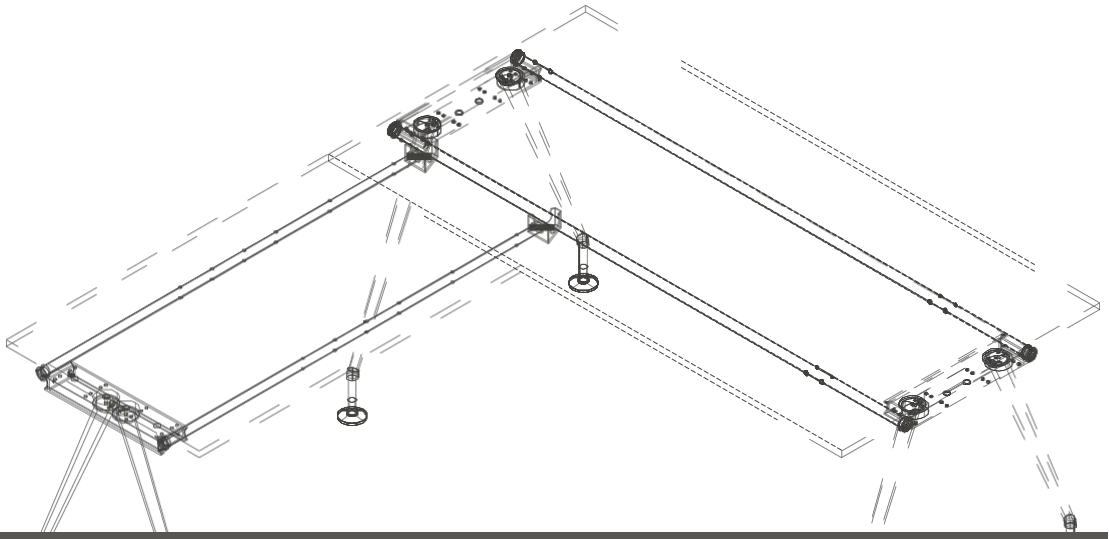

TECHNICAL REPORT

Kinesis tops:

The work tops Kinesis are in melamine 18mm thick with ABS edges 2mm thick with rounded angles. Panels are covered both sides with melaminic paper scratch-resistant and anti-glare. Theused materials are classified E1 for their low emission of formaldehyde. The tops are in glass thickness 10mm and are polished edge on the four sides. They could be painted in the lower part in purple colour or on demand in other colours with RAL reference.

Top colour finishes :

1) White;
2) Cherry;
3) Beech;
4) Grey;
5) Oak;
6) Wengè;

Metallic Details:

The Kinesis leg is released with a metallic tubolar. It is painted with epoxy non-toxic powders in white colour or grey aluminum colour. The telescopic beams are furnished painted with epoxy non-toxic powders in grey aluminum colour.

Front panels for desktops:

The front panels for desktops (both upper and lower ones) are in melamine thickness 18mm with ABS edges thickness 2mm with round angles. They are covered both sides with melaminc paper anti-glare and scratch-resistant. The upper panel is standard built with an holder accessories profile in anodized aluminum. The materials are classified E1 for their low emissions of formaldehyde. The upper panels could be released also in 5mm thick tempered glass, coloured according to RAL colours.

Equipped bars:

The bars could be equipped and are manufactured in extruded aluminum, finished anodized aluminum. These bars are 30mm width and 50mm height.

Metallic drawers:

The metallic drawers could be furnished with metallic drawers or classifiers. The structure and its details are painted in metal with epoxy powders in white or grey aluminum colours. Dressers are standard produced with lock and anti-capsizing system.

Bearing drawers:

The structure and the drawers' front panels are in melamine 18 mm thick, with ABS edge 2mm thick with round angles; panels are covered both sides with melamine paper scratch-resistant and anti-glare. Panels are classified E1 for the low level of formaldehyde emissions. Drawers are in metal pain- ted with epoxy atoxic powders color grey. Drawers are released in metal grey painted with atoxic epoxy powders.

Bookcases:

The bookcases' structure are in melamine 18 mm thick with ABS edges thickness 2 mm with round angles, the backs of the bookcases with 14mm thick. The panels are covered with melamine paper scratch-resistant and anti-glare in grey aluminum colour. The structures and the backs are only in grey aluminum colour. The used materials are in class E1 for the low formaldehyde emission.

Shelves:

The wooden shelves are released in melamine thickness 22 mm, class E1 for the low level of formaldehyde emissions. The panels are covered both sides with melamine paper scratch-resistant and anti-glare. Metallic shelves (optionals) are 30mm thick, painted with atoxic epoxy powders grey colour. Shelves are positionable in height.

Bookcases' doors:

The wooden doors are in melamine 18mm thick, with ABS edges thickness 2mm with round angles, classified E1 for the low level of formaldehyde emissions. Panels are covered both sides with melamine paper scratch-resistant and anti-glare. The bookcases' doors could even be in glass and they have an aluminum frame natural anodized colour. The tempered glass has thickness 4mm. The doors have standard locks (furnished duplicate) nickeled with ABS key cover.

Tops and side coverings:

The bookcases' tops and side coverings are in melamine 18mm thick with ABS edges 2mm thick and round angles, classified E1 for the low level of formaldehyde emissions.
The panels are covered both sides with melamine paper scratch-resistant and anti-glare.